UPCOM
The Faster. The Better.
www.upcom.com.tr

RACK CABINET EXPLODED VIEW

Width : 800 mm
Depth : 800 mm

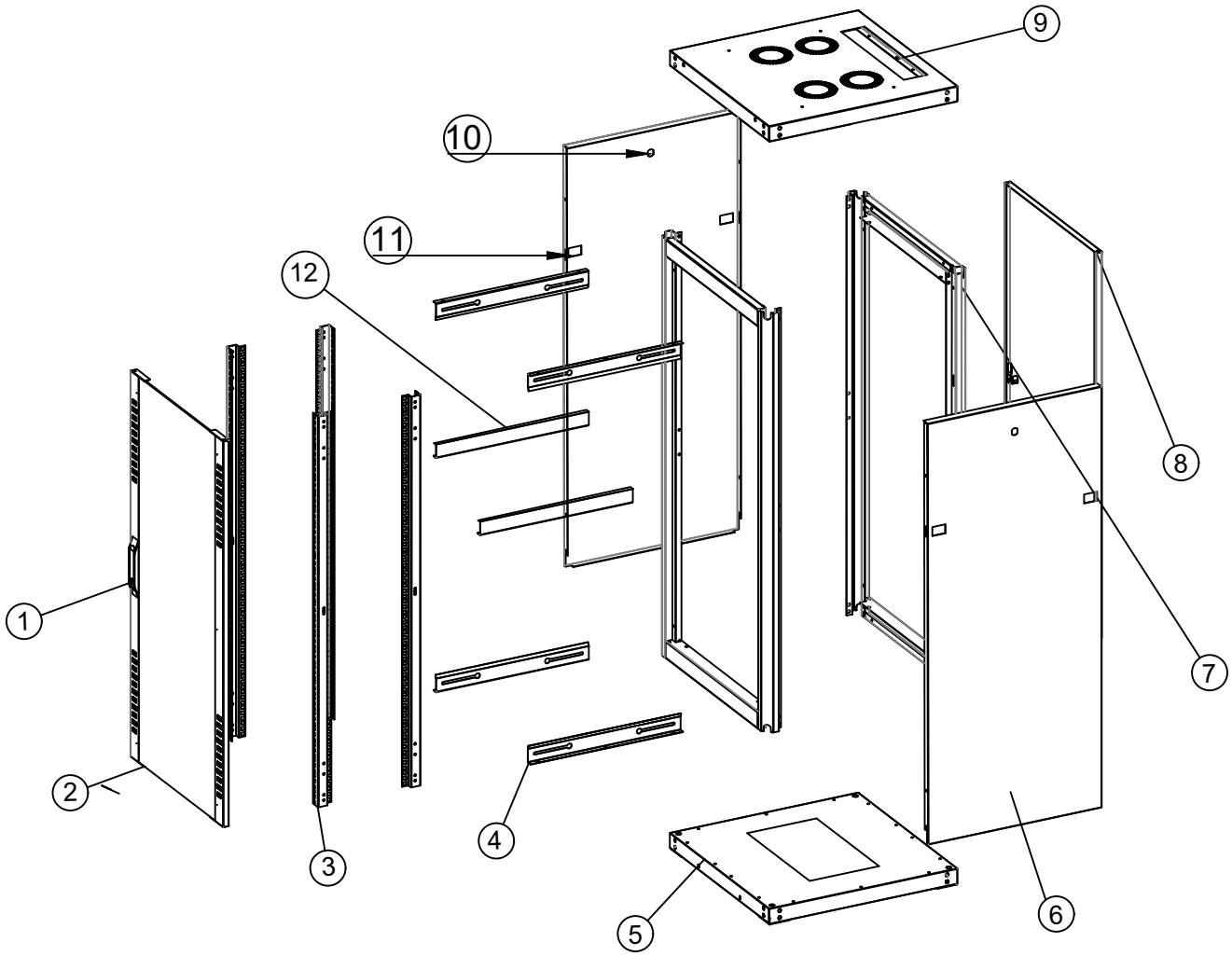

NO	DESCRIPTION	QTY	MATERIAL	THICKNESS (mm)
1	LOCKING SYSTEM	1		
2	METAL FRAMED GLASS FRONT DOOR	1	DKP /TEMPERED GLASS	1,20/4,00mm
3	19" MOUNTING RAILS	4	GALVANIZED STEEL	1,50
4	SIDE BRACKET	6	GALVANIZED STEEL	1,50
5	BOTTOM PANEL	1	DKP SHEET	1,20
6	SIDE PANEL	2	DKP SHEET	1,20
7	CARRIER FRAME	4	DKP SHEET	1,50
8	REAR PANEL	1	DKP SHEET	1,20
9	TOP PANEL	1	DKP SHEET	1,20
10	CYLINDRICAL LOCK	3		
11	PLASTIC SNAP LOCK	4		
12	19" ADAPTOR BRACKET	2	GALVANIZED STEEL	1,50

UPCOM
The Faster. The Better.
www.upcom.com.tr

12 U 800X800 RACK CABINET

Width : 800 mm
Depth : 800 mm
Height : 692 mm

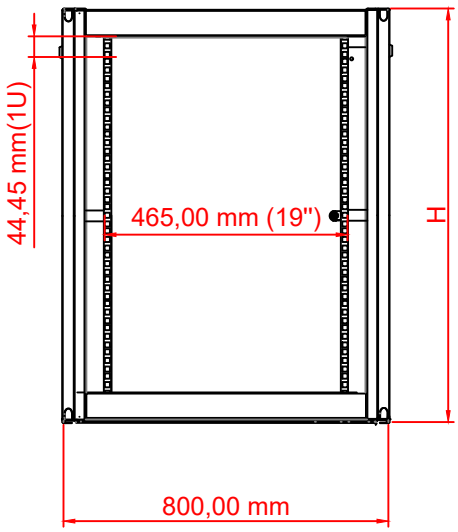

Front inside view

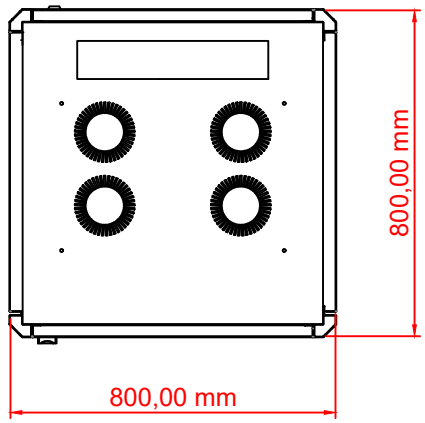

Top view

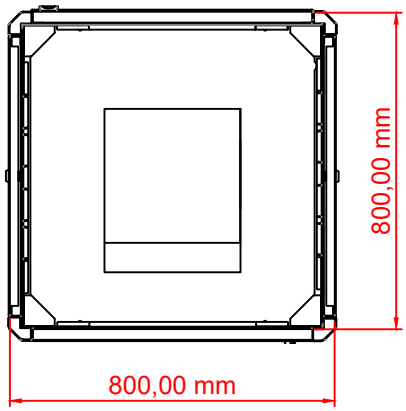

Bottom view

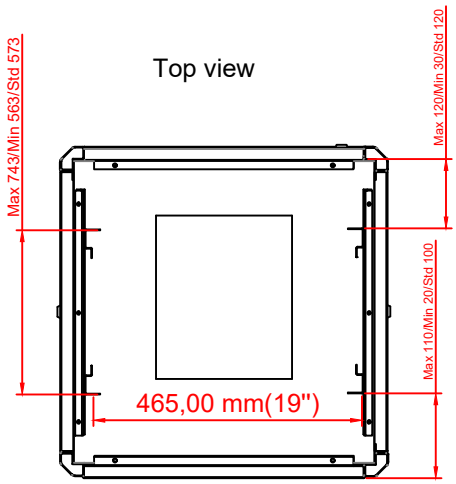

Max/std/min equipment
. mounting distance

	H
12 U	692,00 mm
16 U	870,00 mm
20 U	1048,00 mm
25 U	1270,00 mm
27 U	1359,00 mm
32 U	1581,00 mm
36 U	1760,00 mm
42 U	2027,00 mm
45 U	2160,00 mm

UPCOM
The Faster. The Better.
www.upcom.com.tr

12 U RACK CABINET

Width : 800 mm
Depth : 800 mm
Height : 692 mm

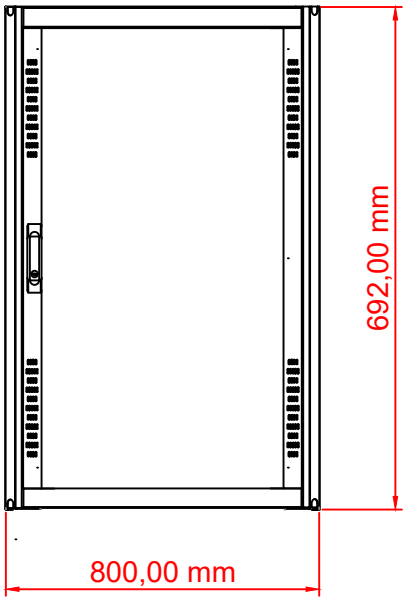

Front view

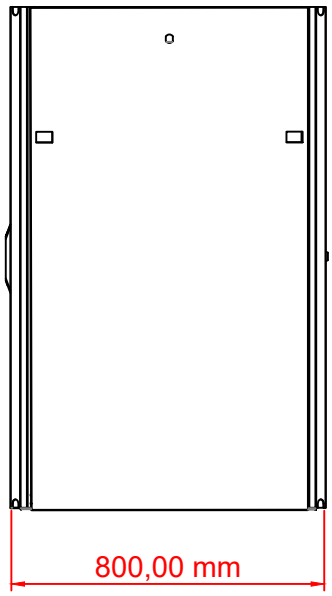

Side view

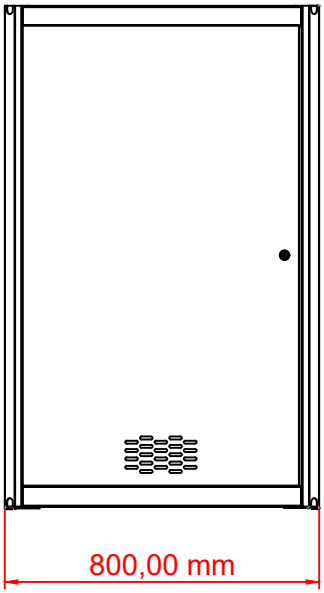

Rear view

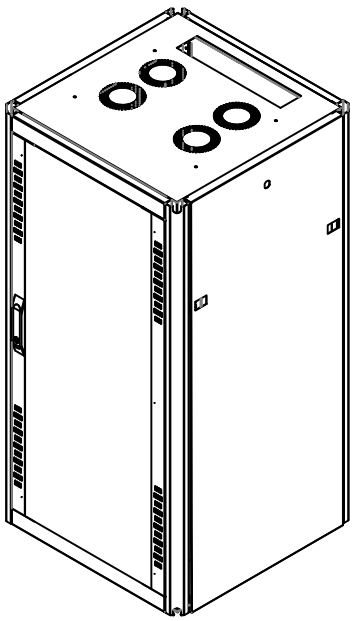

Perspective view

UPCOM
The Faster. The Better
www.upcom.com.tr

DOOR OPTIONS

Width : 800 mm
Depth : 800 mm

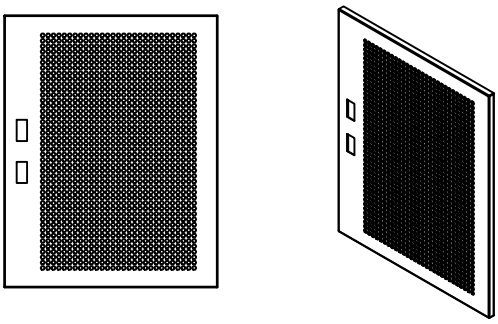

PERFORATED SINGLE OPENING DOOR

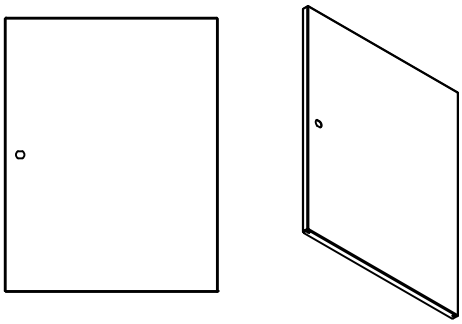

METAL SOLID REAR DOOR

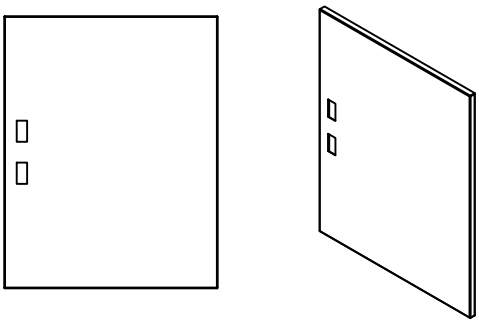

SINGLE OPENING SOLID METAL DOOR

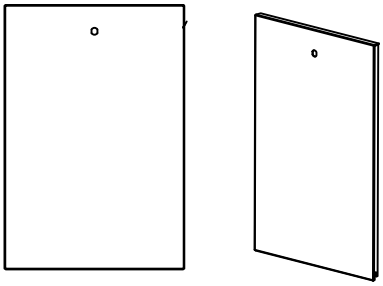

METAL SOLID SIDE PANEL

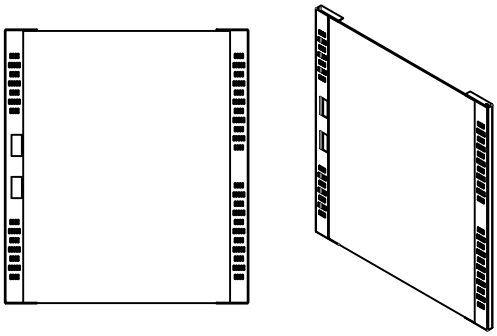

METAL FRAMED GLASS DOOR

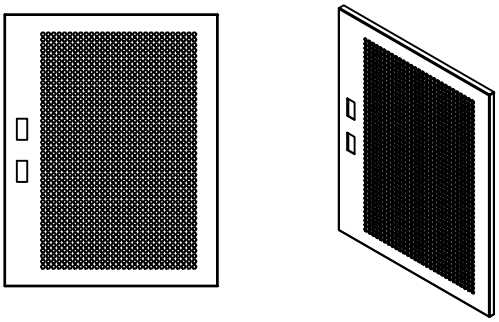

PERFORATED CURVED SINGLE OPENING FRONT DOOR

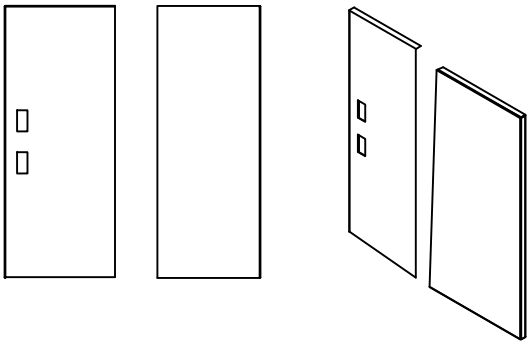

DOUBLE OPENING METAL COVER DOOR REAR AND/OR FRONT DOOR

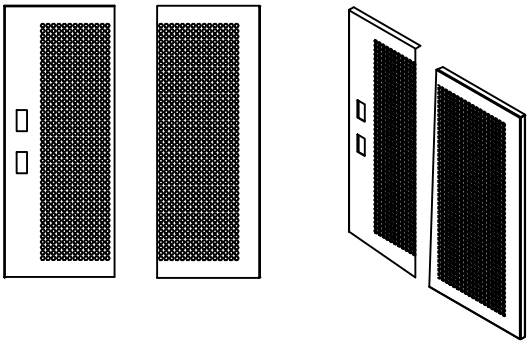

PERFORATED DOUBLE OPENING DOOR REAR AND/OR FRONT DOOR