# RACK CABINET EXPLODED VIEW

Width : 600 mm
Depth : 600 mm

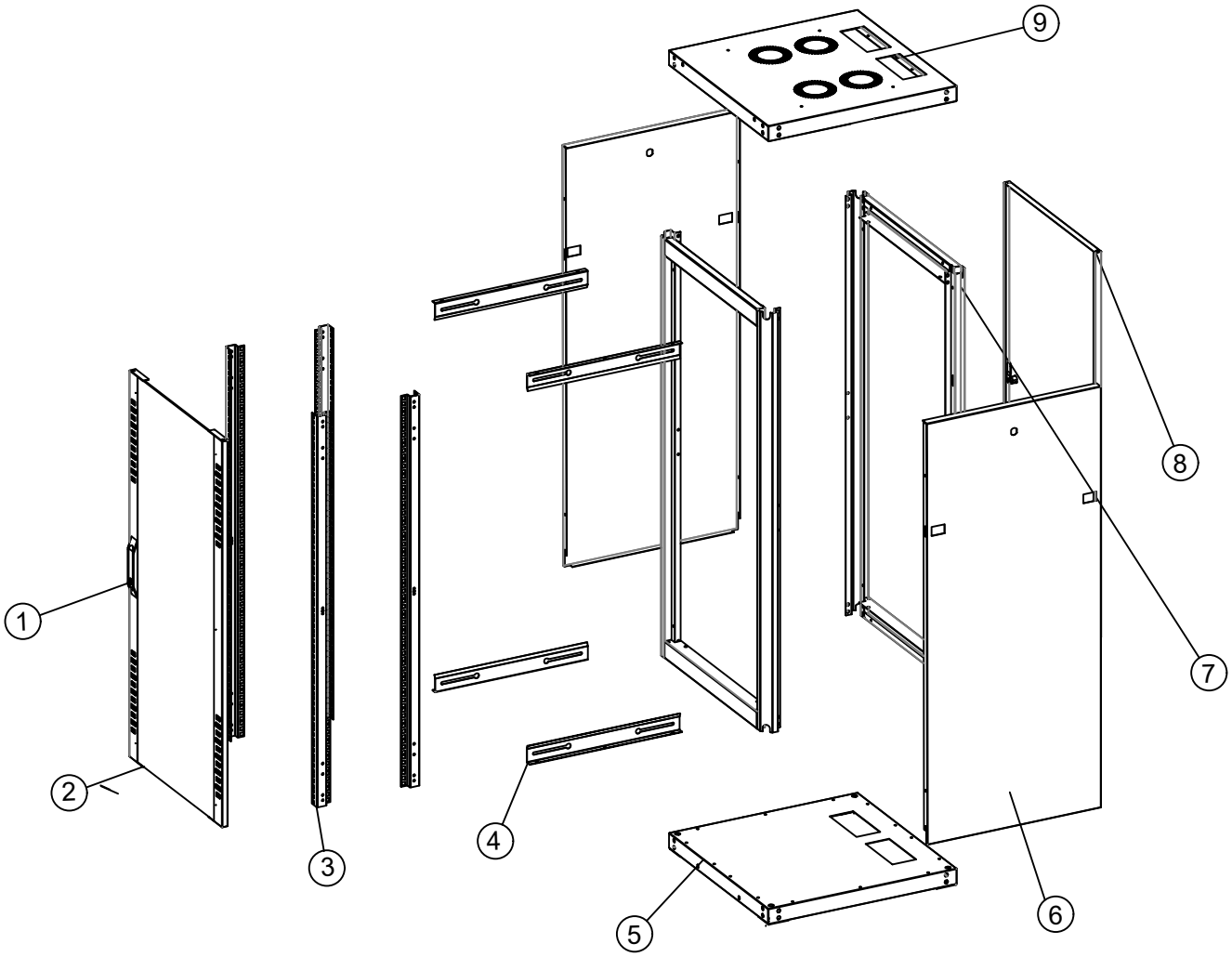


| NO | DESCRIPTION | QTY | MATERIAL | THICKNESS (mm) |
|---|---|---|---|---|
| 1 | LOCKING SYSTEM | 1 | | |
| 2 | METAL FRAMED GLASS FRONT DOOR | 1 | DKP /TEMPERED GLASS | 1,20/4,00mm |
| 3 | 19" MOUNTING RAILS | 4 | GALVANIZED STEEL | 1,50 |
| 4 | SIDE BRACKET | 4 | GALVANIZED STEEL | 1,50 |
| 5 | BOTTOM PANEL | 1 | DKP SHEET | 1,20 |
| 6 | SIDE PANEL | 2 | DKP SHEET | 1,20 |
| 7 | CARRIER FRAME | 4 | DKP SHEET | 1,50 |
| 8 | REAR PANEL | 1 | DKP SHEET | 1,20 |
| 9 | TOP PANEL | 1 | DKP SHEET | 1,20 |

UPCOM
The Faster. The Better.
www.upcom.com.tr

25 U 600X600 RACK CABINET

Width : 600 mm
Depth : 600 mm
Height : 1270 mm

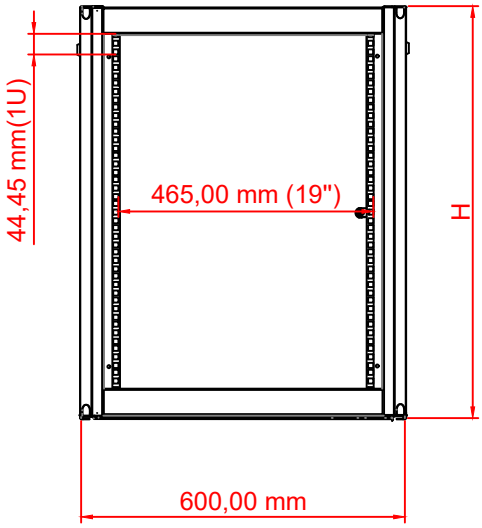


Front inside view

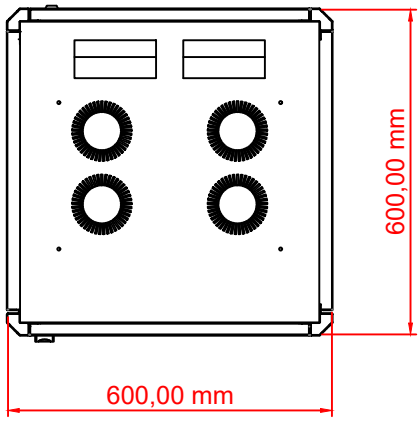


Top view

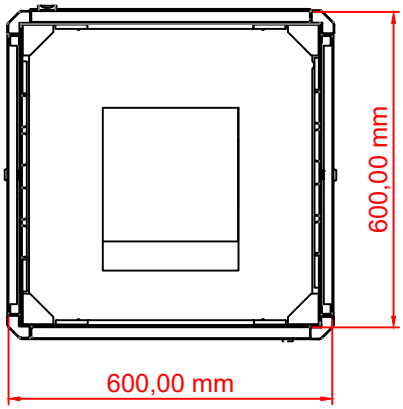


Bottom view

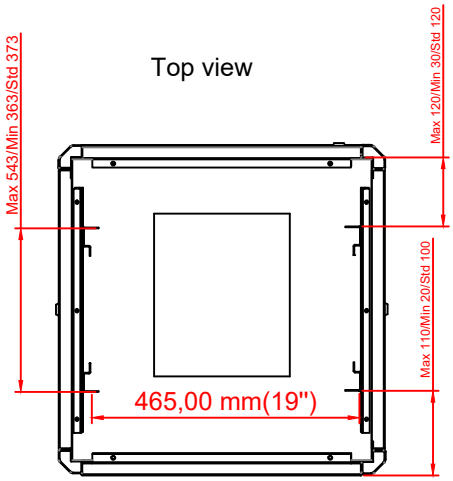


Max/std/min equipment
. mounting distance

| | H |
|---|---|
| 12 U | 692,00 mm |
| 16 U | 870,00 mm |
| 20 U | 1048,00 mm |
| 25 U | 1270,00 mm |
| 27 U | 1359,00 mm |
| 32 U | 1581,00 mm |
| 36 U | 1760,00 mm |
| 42 U | 2027,00 mm |
| 45 U | 2160,00 mm |

UPCOM
The Faster. The Better.
www.upcom.com.tr

25 U RACK CABINET

Width : 600 mm
Depth : 600 mm
Height : 1270 mm

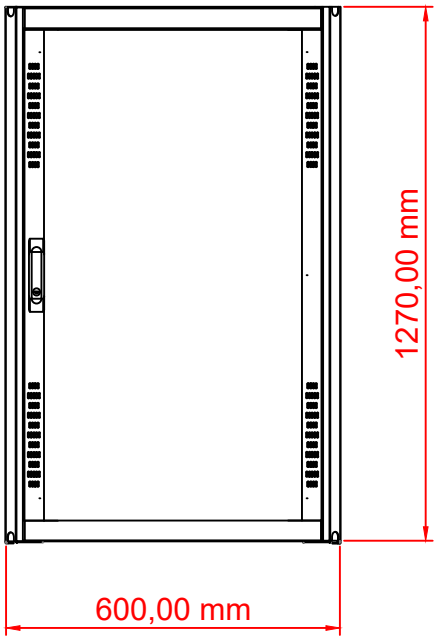


Front view

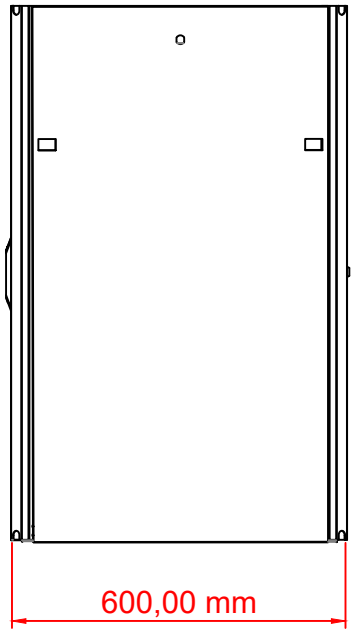


Side view

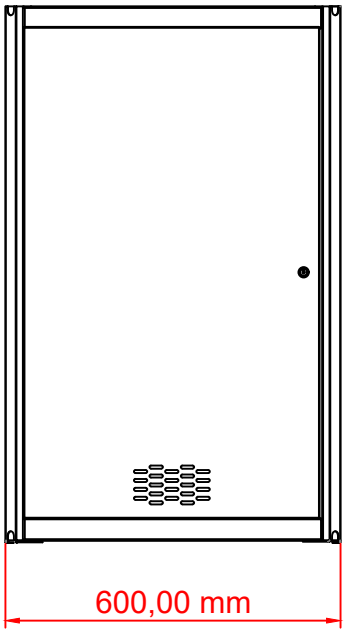


Rear view

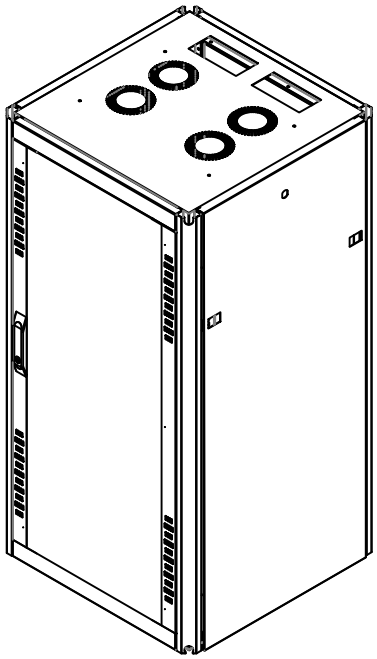

Perspective view

DOOR OPTIONS

Width : 600 mm
Depth : 600 mm

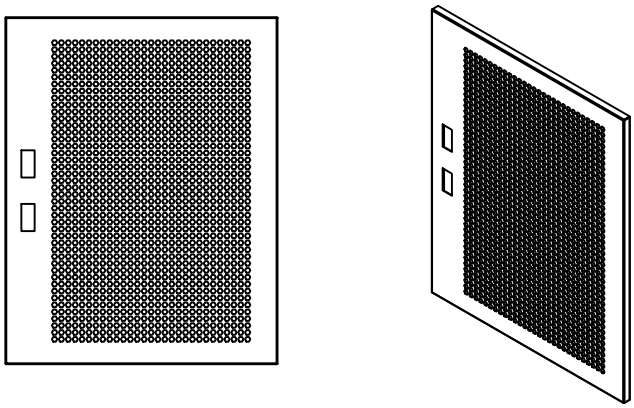

PERFORATED SINGLE OPENING DOOR

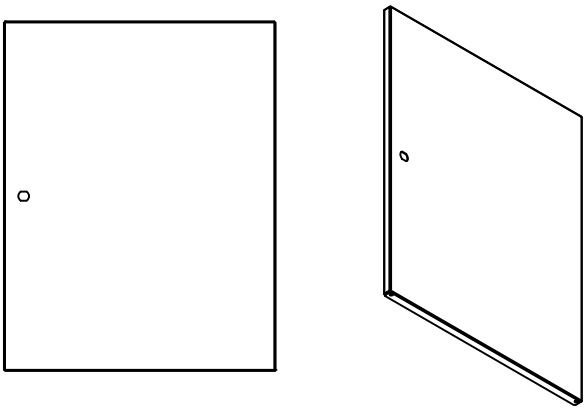

METAL SOLID REAR DOOR

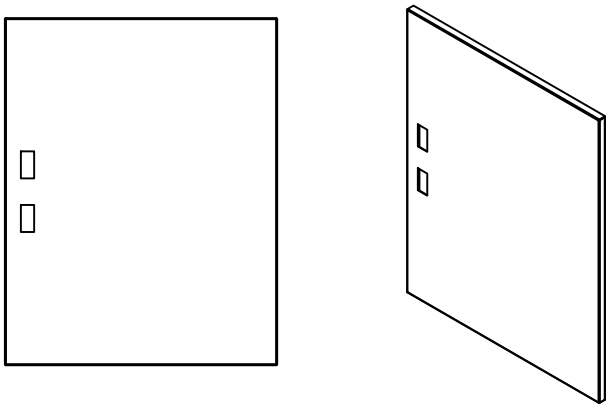

SINGLE OPENING SOLID METAL DOOR

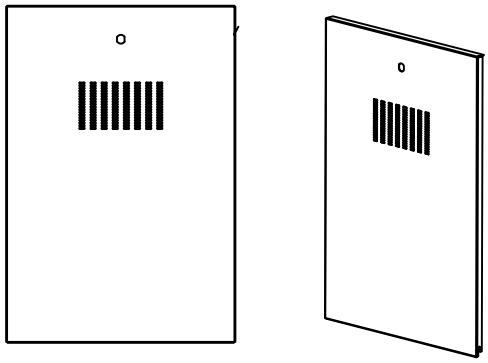

METAL SOLID SIDE DOOR

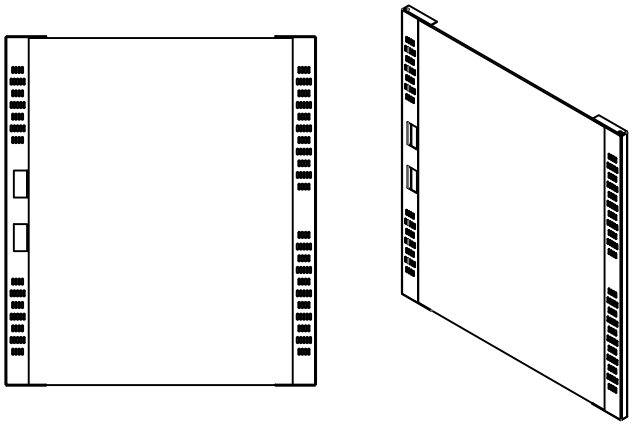

METAL FRAMED GLASS DOOR

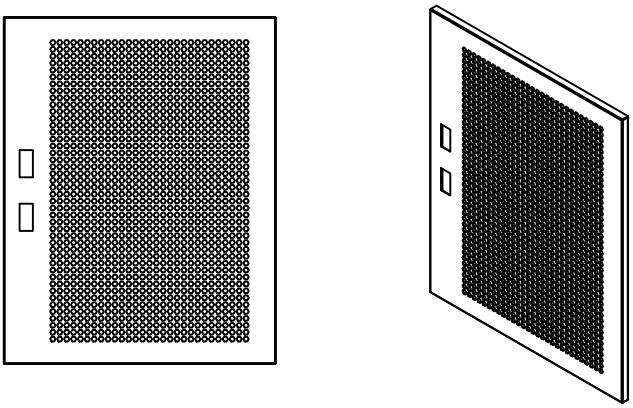

PERFORATED CURVED SINGLE OPENING FRONT DOOR