UPCOM
The Faster. The Better.
www.upcom.com.tr

42U 800X1200 FS LINE SERVER CABINET EXPLODED VIEW

Width : 800 mm
Depth : 1200 mm
Height : 2027 mm

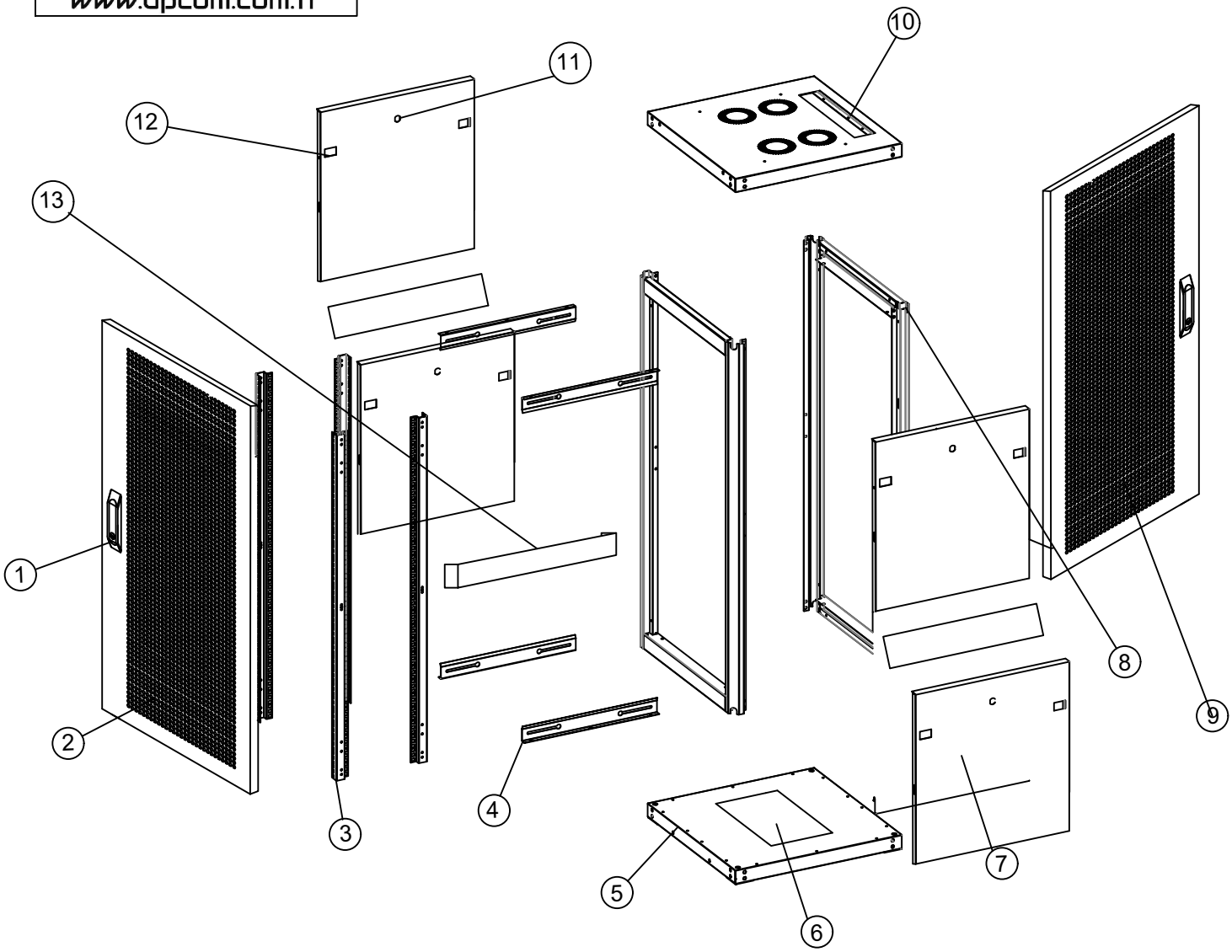

NO	DESCRIPTION	QTY	MATERIAL	THICKNESS (mm)
1	LOCKING SYSTEM	1		
2	PERFORATED SINGLE OPENING FRONT DOOR	1	DKP SHEET	1,20
3	19" MOUNTING RAILS	4	GALVANIZED STEEL	2,00
4	SIDE BRACKET	6	GALVANIZED STEEL	2,00
5	BOTTOM PANEL	1	DKP SHEET	1,20
6	SLIDING CABLE ENTRY	1	DKP SHEET	1,20
7	SIDE PANEL	4	DKP SHEET	1,20
8	CARRIER FRAME	4	DKP SHEET	2,00
9	PERFORATED SINGLE OPENING REAR PANEL	1	DKP SHEET	1,20
10	TOP PANEL	1	DKP SHEET	1,20
11	CYLINDRICAL LOCK	4		
12	PLASTIC SNAP LOCK	8		
13	19" ADAPTOR BRACKET	2	GALVANIZED STEEL	2,00

42 U 800X1200 FS LINE
SERVER RACK CABINET DRAWINGS

Width : 800 mm
Depth : 1200 mm
Height : 2027 mm

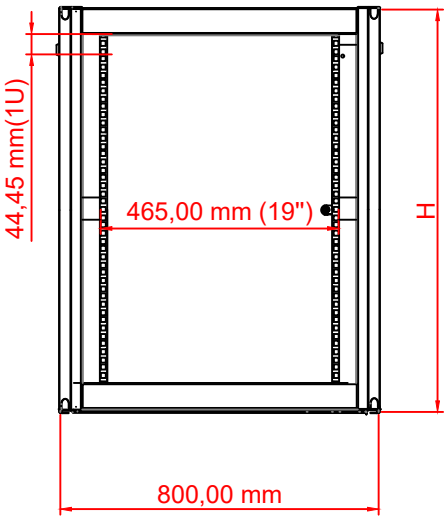

Front inside view

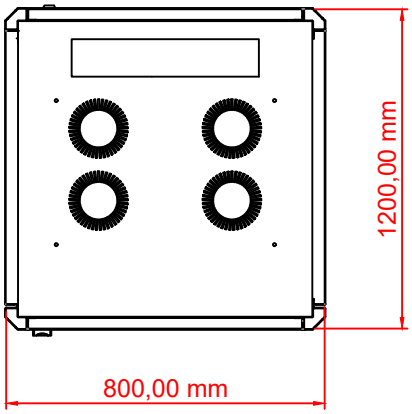

Top view

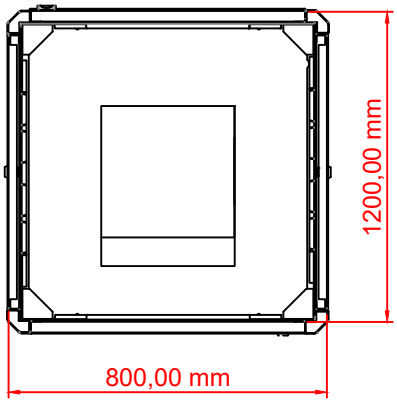

Bottom view

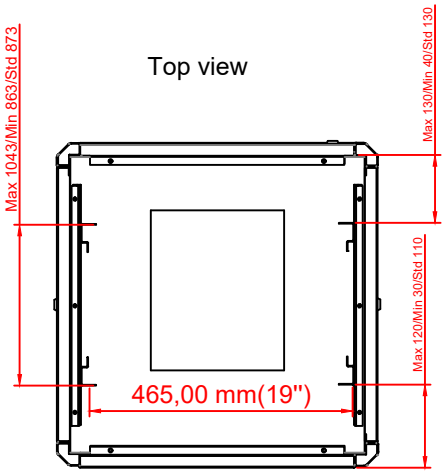

Max/std/min equipment
mounting distance

	H
42 U	2027,00 mm
45 U	2160,00 mm
47 U	2248,00 mm

UPCOM
The Faster. The Better
www.upcom.com.tr

42U 800X1200 FS LINE SERVER CABINET DRAWINGS

Width : 800 mm
Depth : 1200 mm
Height : 2027 mm

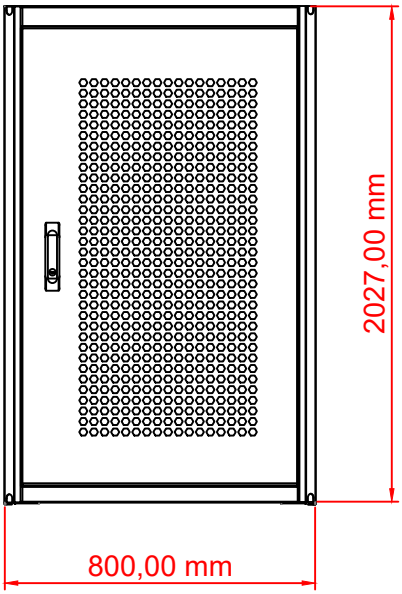

Front view

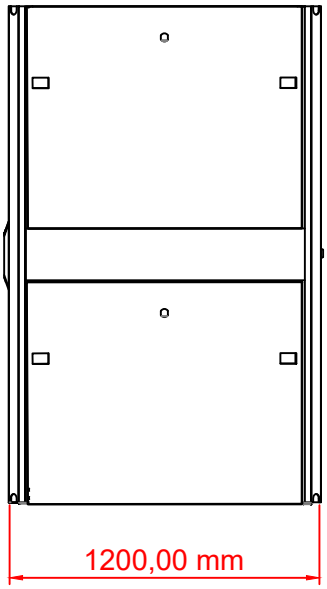

Side view

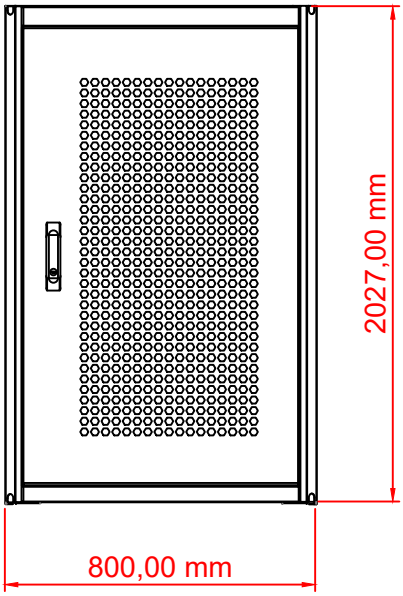

Rear view

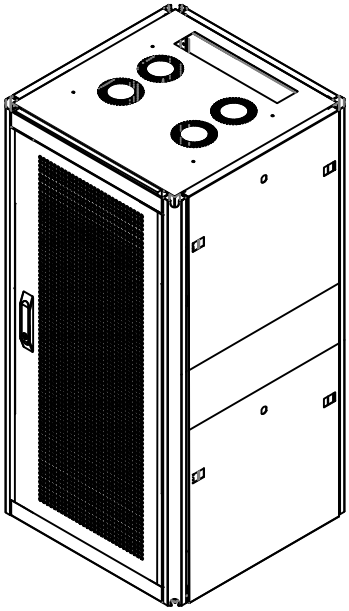

Perspective view