RACK CABINET EXPLODED VIEW

Width : 600 mm
Depth : 1000 mm

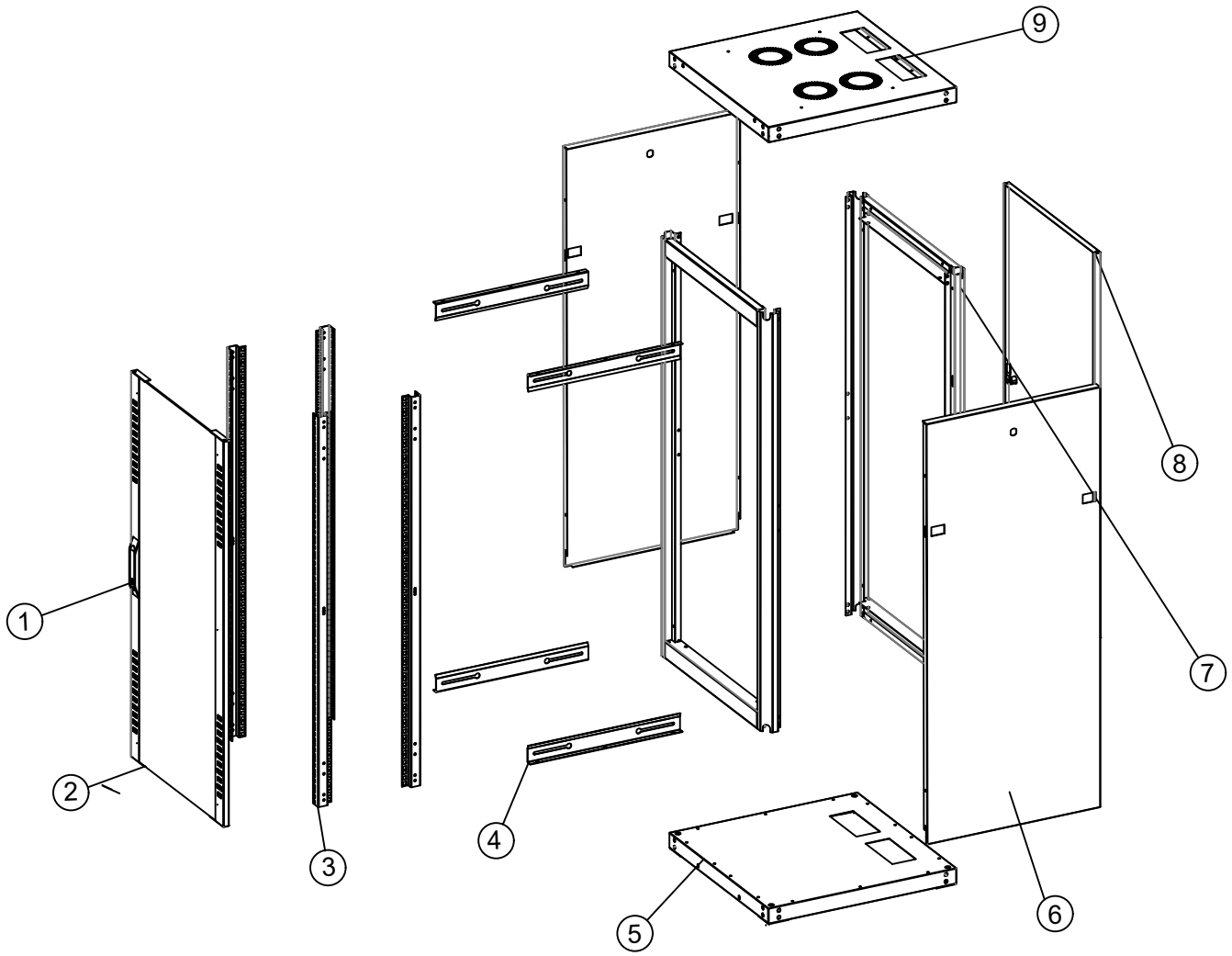

NO	DESCRIPTION	QTY	MATERIAL	THICKNESS (mm)
1	LOCKING SYSTEM	1		
2	METAL FRAMED GLASS FRONT DOOR	1	DKP /TEMPERED GLASS	1,20/4,00mm
3	19" MOUNTING RAILS	4	GALVANIZED STEEL	1,50
4	SIDE BRACKET	4	GALVANIZED STEEL	1,50
5	BOTTOM PANEL	1	DKP SHEET	1,20
6	SIDE PANEL	2	DKP SHEET	1,20
7	CARRIER FRAME	4	DKP SHEET	1,50
8	REAR PANEL	1	DKP SHEET	1,20
9	TOP PANEL	1	DKP SHEET	1,20

UPCOM
The Faster. The Better.
www.upcom.com.tr

45 U 600X1000 RACK CABINET

Width : 600 mm
Depth : 1000 mm
Height : 2160 mm

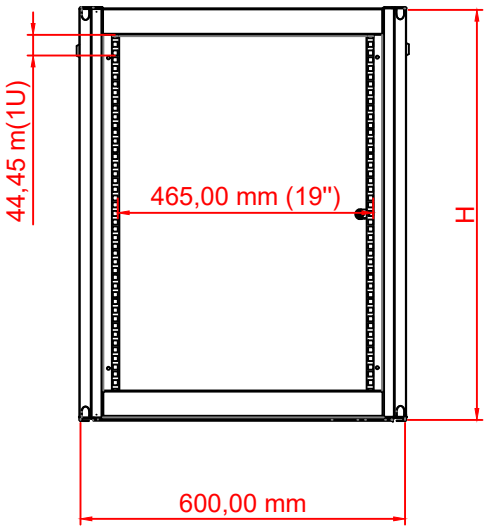

Front inside view

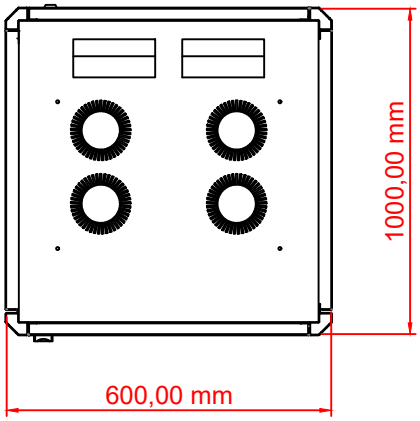

Top view

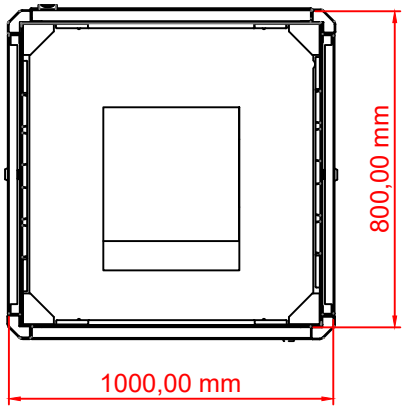

Bottom view

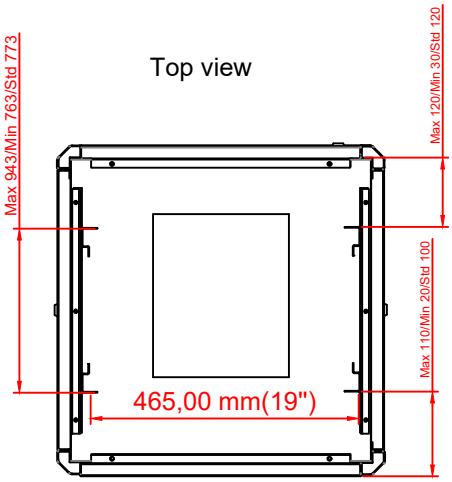

Max/std/min equipment
. mounting distance

	H
12 U	692,00 mm
16 U	870,00 mm
20 U	1048,00 mm
25 U	1270,00 mm
27 U	1359,00 mm
32 U	1581,00 mm
36 U	1760,00 mm
42 U	2027,00 mm
45 U	2160,00 mm

UPCOM
The Faster. The Better.
www.upcom.com.tr

45 U RACK CABINET

Width : 600 mm
Depth : 1000 mm
Height : 2160 mm

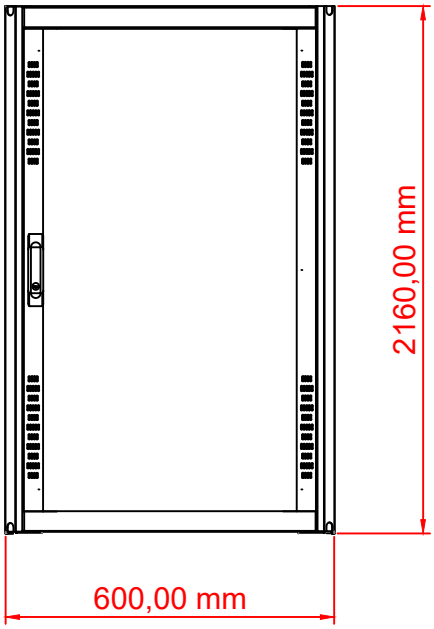

Front view

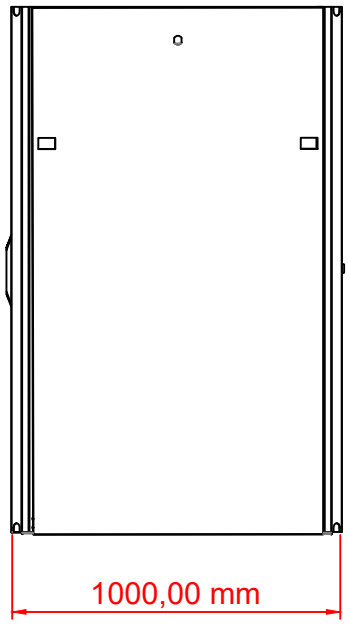

Side view

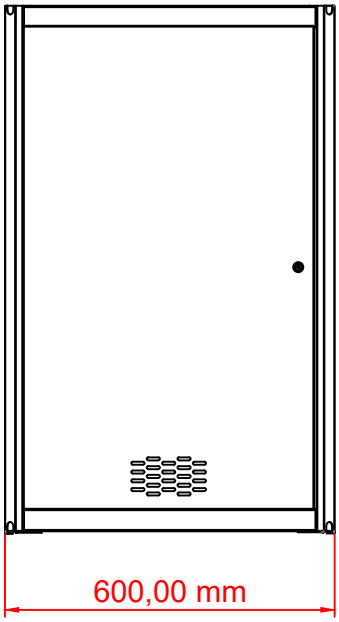

Rear view

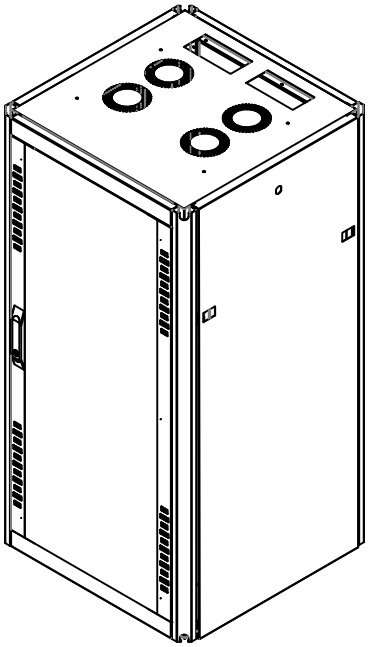

Perspective view

UPCOM
The Faster. The Better
www.upcom.com.tr

DOOR OPTIONS

Width : 600 mm
Depth : 1000 mm

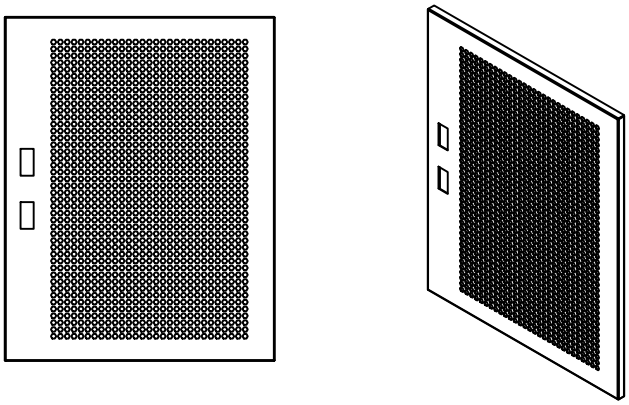

PERFORATED SINGLE OPENING DOOR

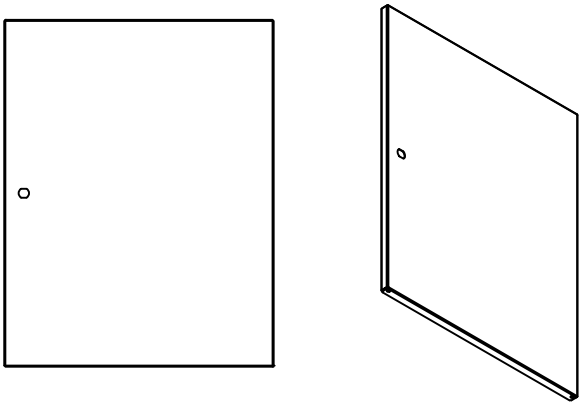

METAL SOLID REAR DOOR

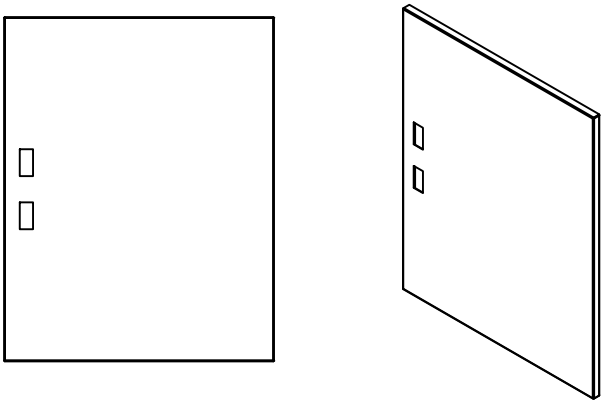

SINGLE OPENING SOLID METAL DOOR

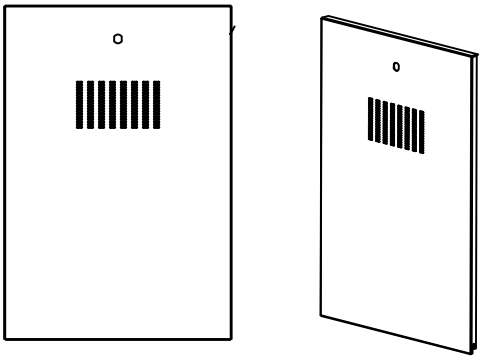

METAL SOLID SIDE DOOR

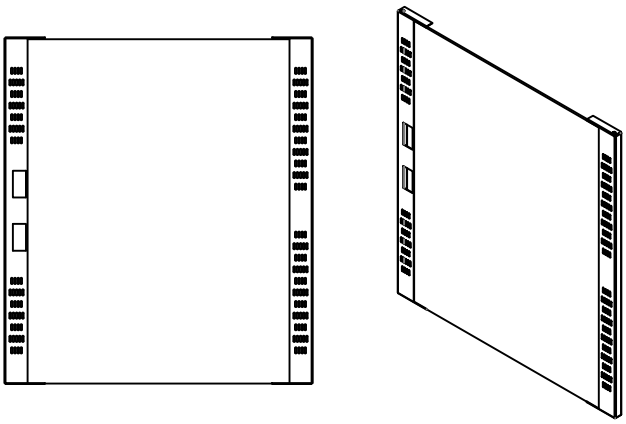

METAL FRAMED GLASS DOOR

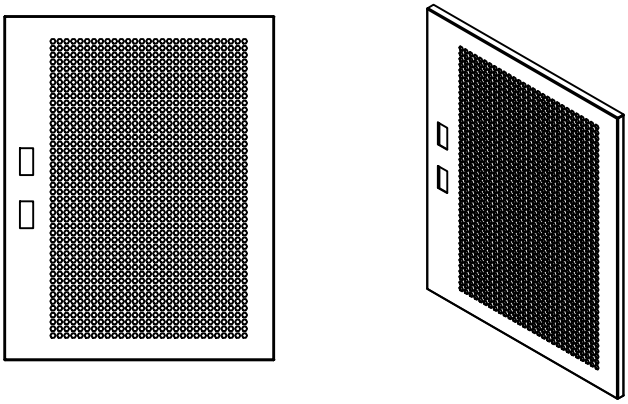

PERFORATED CURVED SINGLE OPENING FRONT DOOR