UPCOM
The Faster. The Better.
www.upcom.com.tr

45 U 600X600 RACK CABINET

Width : 600 mm
Depth : 600 mm
Height : 2160 mm

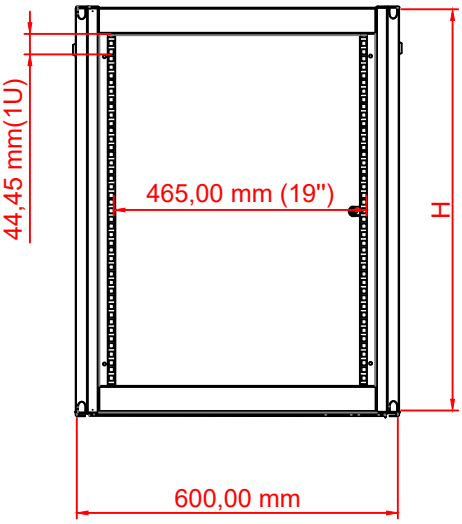

Front inside view

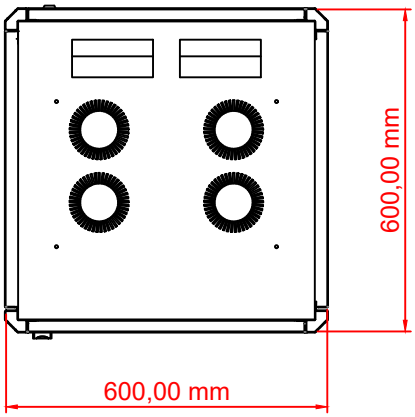

Top view

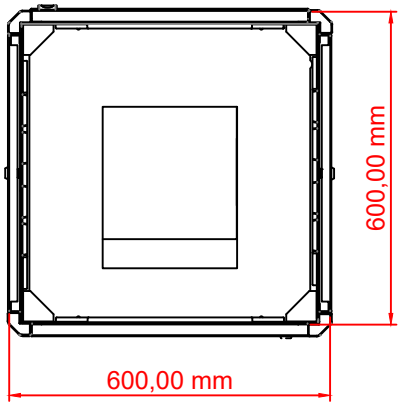

Bottom view

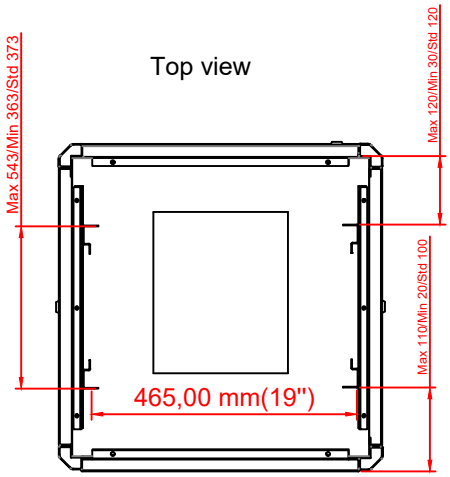

Max/std/min equipment
. mounting distance

	H
12 U	692,00 mm
16 U	870,00 mm
20 U	1048,00 mm
25 U	1270,00 mm
27 U	1359,00 mm
32 U	1581,00 mm
36 U	1760,00 mm
42 U	2027,00 mm
45 U	2160,00 mm

RACK CABINET EXPLODED VIEW

Width : 600 mm
Depth : 600 mm

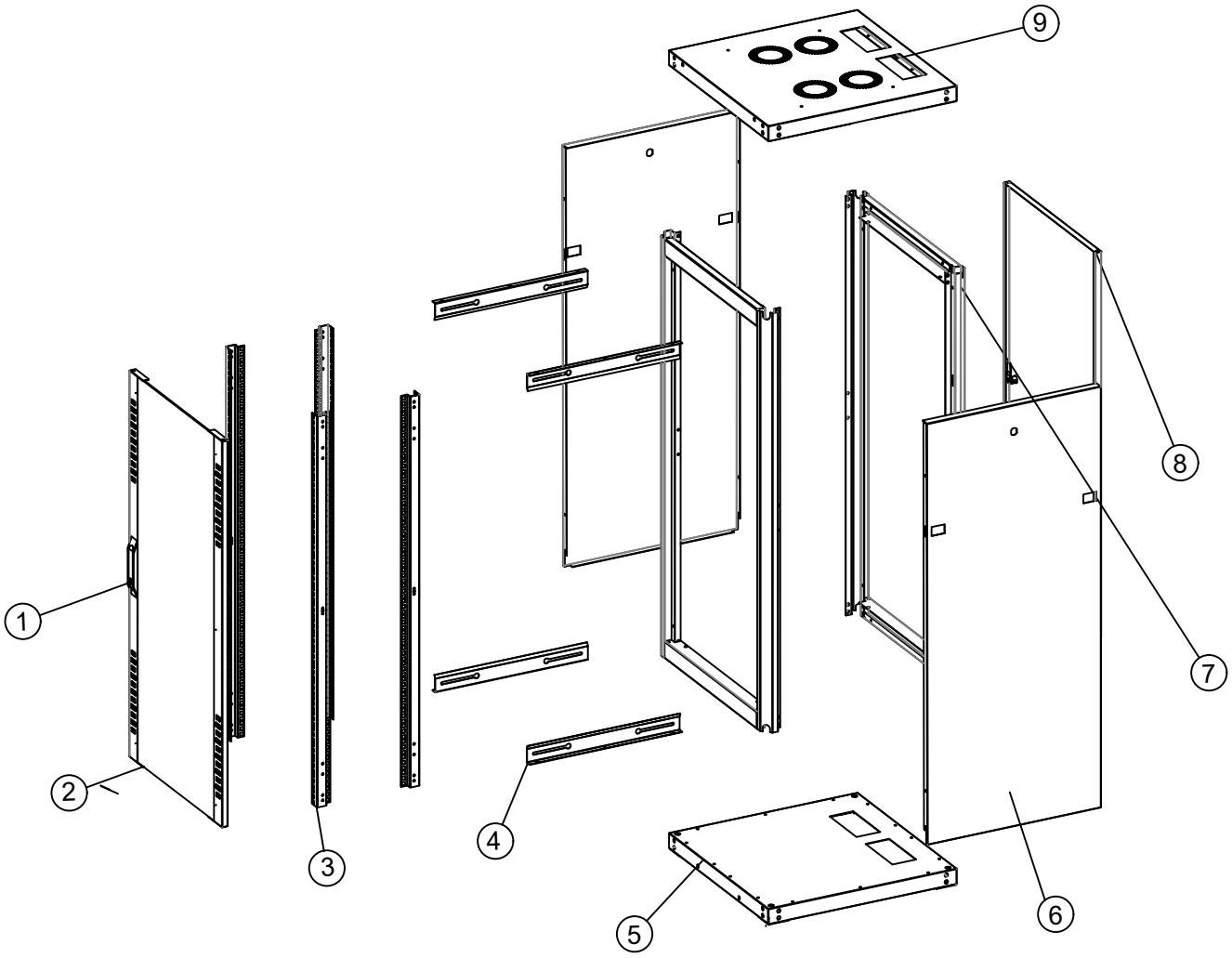

NO	DESCRIPTION	QTY	MATERIAL	THICKNESS (mm)
1	LOCKING SYSTEM	1		
2	METAL FRAMED GLASS FRONT DOOR	1	DKP /TEMPERED GLASS	1,20/4,00mm
3	19" MOUNTING RAILS	4	GALVANIZED STEEL	1,50
4	SIDE BRACKET	4	GALVANIZED STEEL	1,50
5	BOTTOM PANEL	1	DKP SHEET	1,20
6	SIDE PANEL	2	DKP SHEET	1,20
7	CARRIER FRAME	4	DKP SHEET	1,50
8	REAR PANEL	1	DKP SHEET	1,20
9	TOP PANEL	1	DKP SHEET	1,20

UPCOM
The Faster. The Better
www.upcom.com.tr

DOOR OPTIONS

Width : 600 mm
Depth : 600 mm

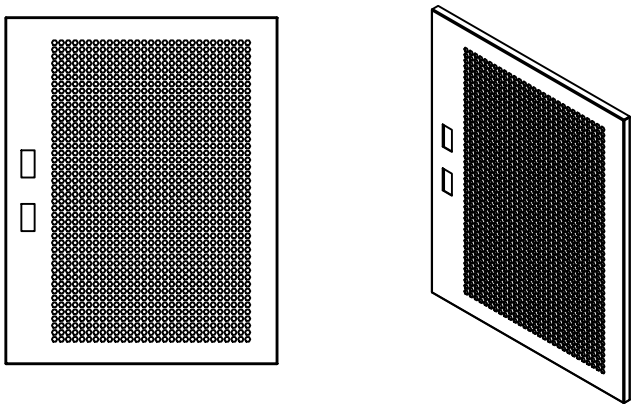

PERFORATED SINGLE OPENING DOOR

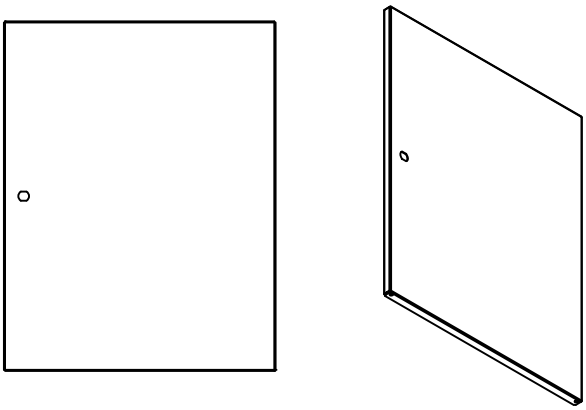

METAL SOLID REAR DOOR

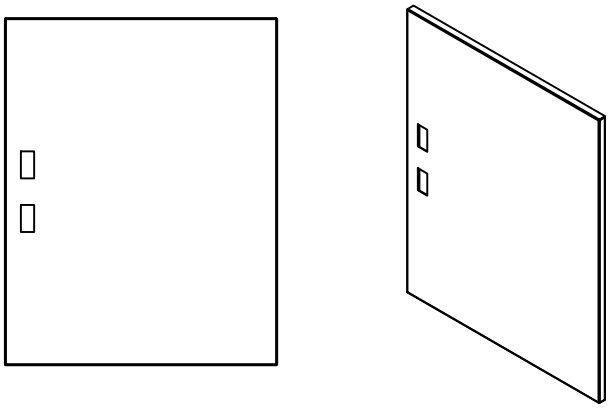

SINGLE OPENING SOLID METAL DOOR

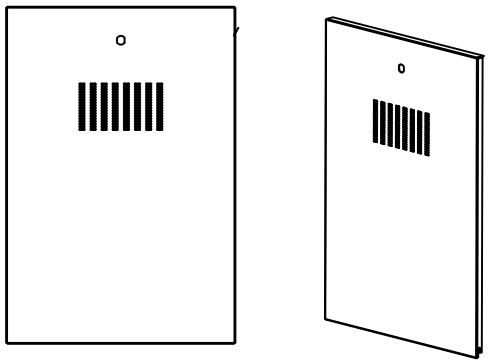

METAL SOLID SIDE DOOR

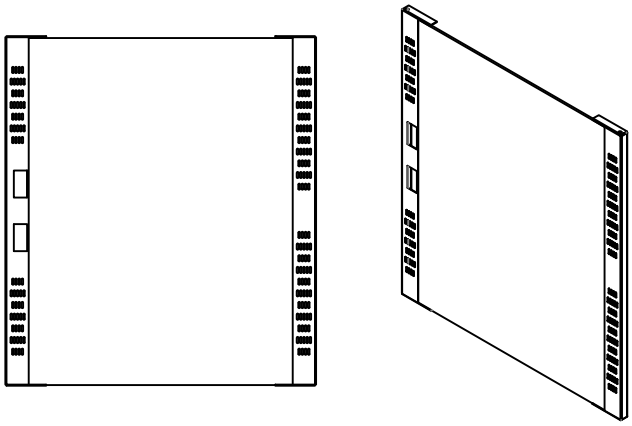

METAL FRAMED GLASS DOOR

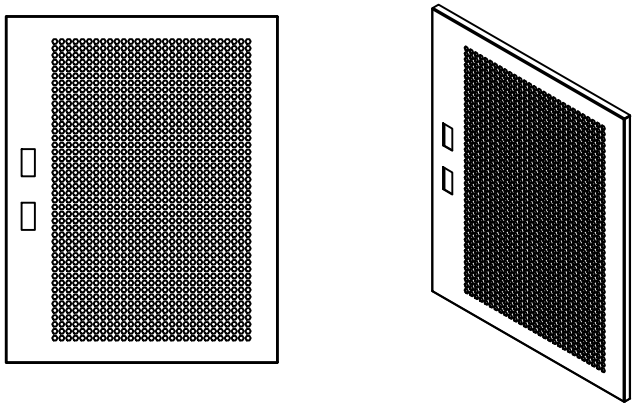

PERFORATED CURVED SINGLE OPENING FRONT DOOR

UPCOM
The Faster. The Better.
www.upcom.com.tr

45 U RACK CABINET

Width : 600 mm
Depth : 600 mm
Height : 2160 mm

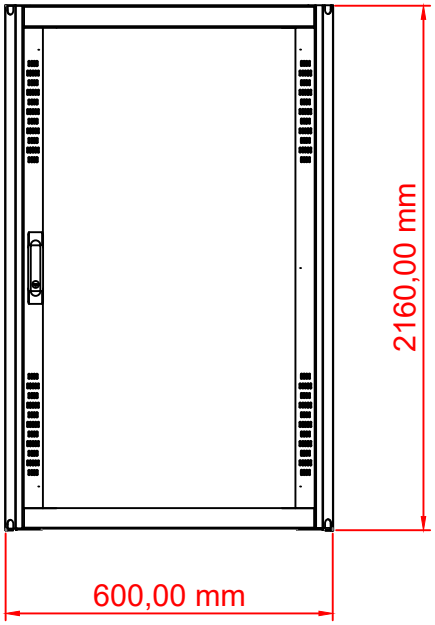

Front view

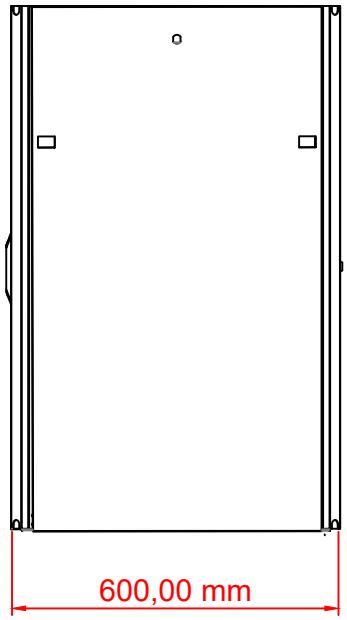

Side view

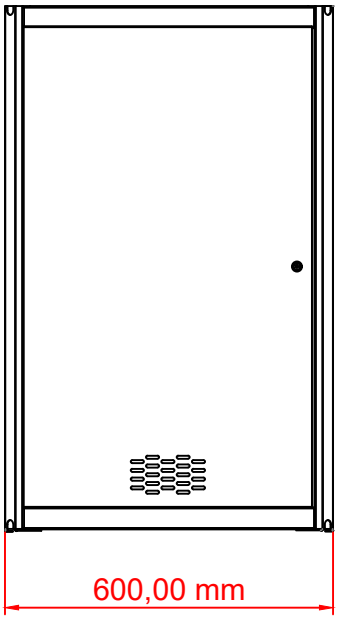

Rear view

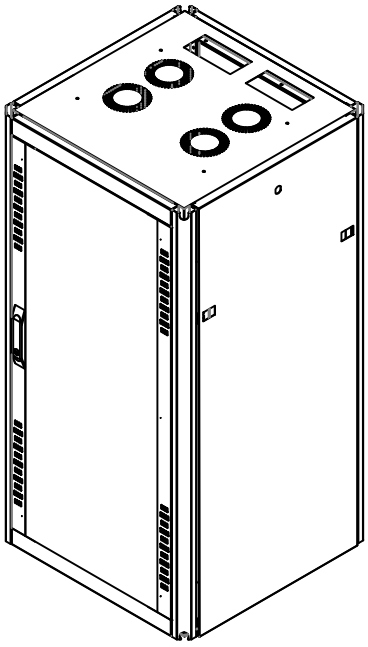

Perspective view