ALPINE LINE

7U 553x450

19 inch wall mount rack cabinet

UPC-ALPI-7U450

7U
Rack height

120 kg
Load capacity

IP20
Indoor enclosure

Series illustration from the 450 mm source datasheet. Model height is specified below.

Metal-framed 4 mm smoked tempered glass front door, round O-lock / barrel lock and removable locking side panels. Ventilation supports optional cooling units with 1 or 2 fans.

Order code	**UPC-ALPI-7U450**
External W x D x H	**553 x 450 x 371 mm**
Internal rack height h	**314 mm**
Cabinet weight	**14 kg**
Mounting rails	**Four depth-adjustable 19 inch rails; U-marked**
Finish / colours	**Powder-coated steel; RAL 7035 / RAL 9005**

Technical drawings

450 mm series drawing. H and h are variable dimensions; use the values for UPC-ALPI-7U450 below. All dimensions are in mm. The common drawing is not a separate CAD drawing for this SKU.

7U / W 553 / D 450 / H 371 / h 314

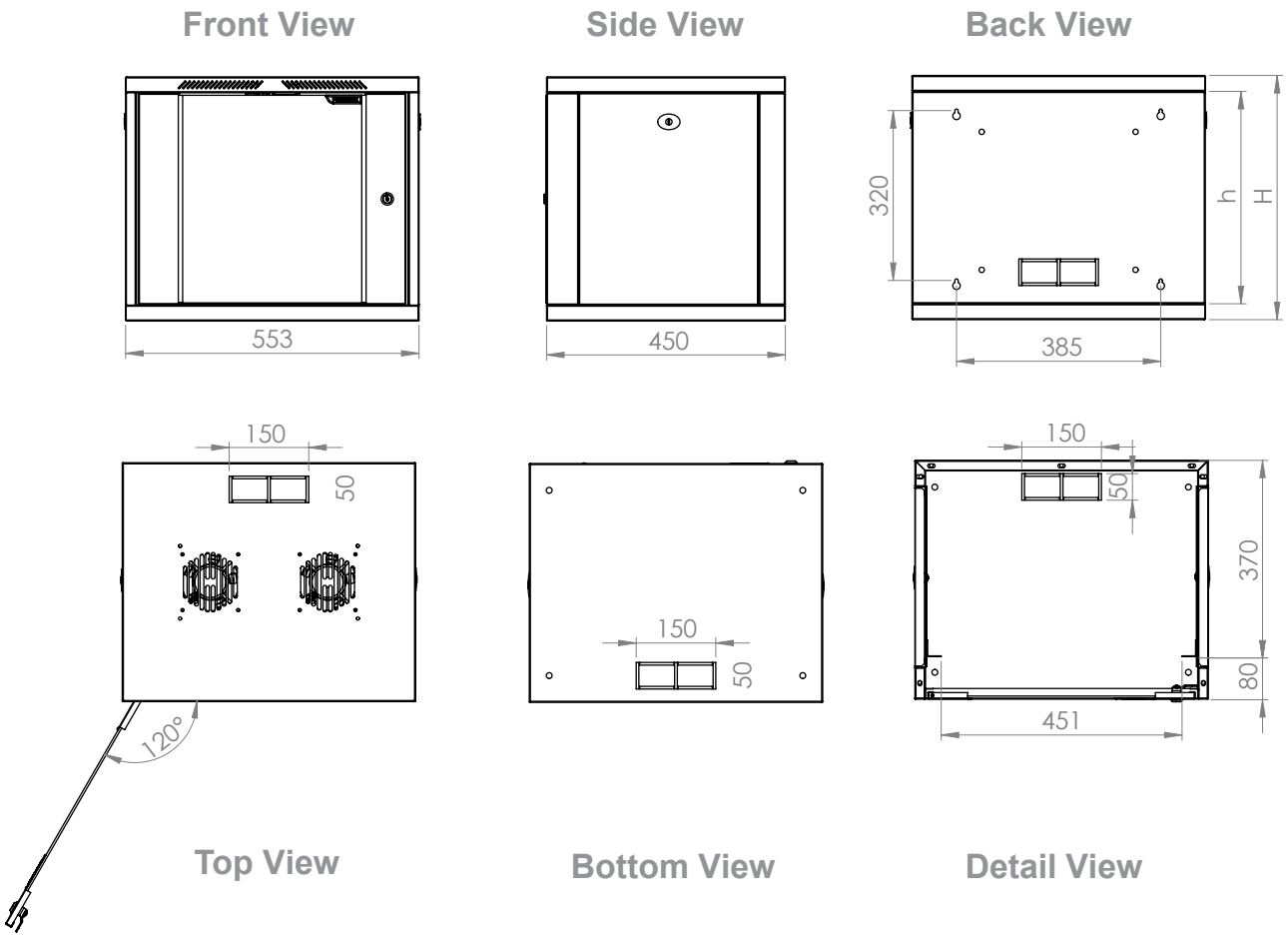

Model	**UPC-ALPI-7U450**
External W x D x H	**553 x 450 x 371 mm**
Internal height h / rack capacity	**314 mm / 7U**
Cabinet weight / load capacity	**14 kg / 120 kg**

External cabinet depth is not the maximum usable equipment depth. Confirm rail position, connector clearance and cable bend space before ordering.

Exploded view and construction

Original 450 mm series assembly illustration. Fan units are optional. The drawings show the round door lock, side-panel locks, cable entries and U-marked mounting rails.

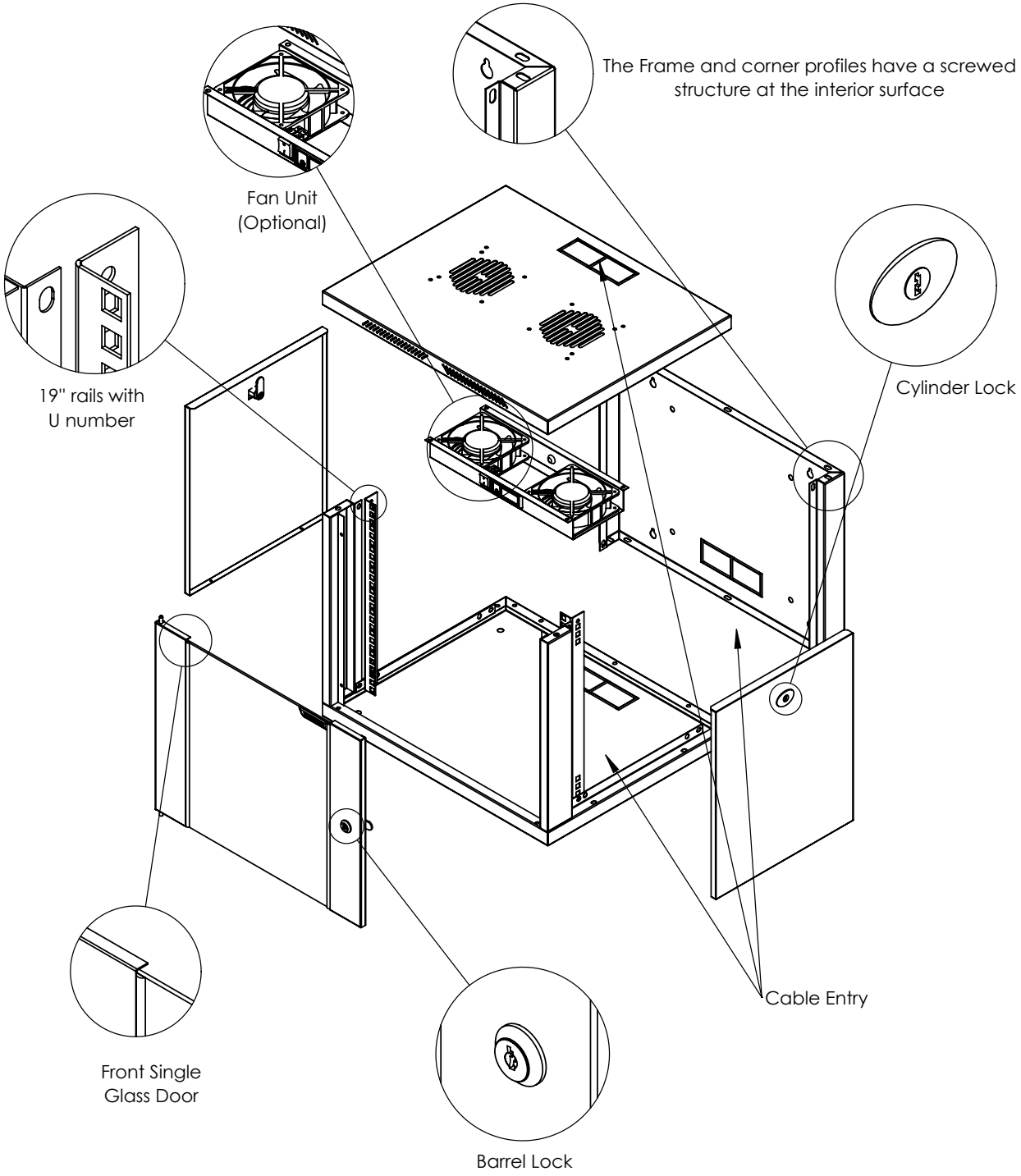

Product selection and quotations: info@upcom.com.tr