OXOLINE / TECHNICAL DATASHEET

20U Oxoline rack cabinet

UPC-OXO-20U60100 | 19-inch floor-standing cabinet | 600 × 1000 mm nominal footprint



Series photograph. Cabinet height varies by model.

UPCOM ORDER CODE

UPC-OXO-20U60100

Equipment mounting

Four depth-adjustable 19-inch rails with U markings support network equipment and patch panels.

Access and cable routing

Removable, lockable steel side and rear panels provide service access. Cables enter through a sliding brush opening in the base.

Front door and finish

The standard front door has 4 mm smoked tempered glass. See page 3 for door styles and finishes.

RACK HEIGHT	EXTERNAL W × D	CABINET WEIGHT
20U	600 × 1000 mm	56 kg

Overall height (H)	**1120 mm**
Internal height (h)	**892 mm**
Cabinet load capacity	**1,200 kg**
Ingress protection	**IP20**

OXOLINE / MECHANICAL DRAWING

20U cabinet dimensions

UPC-OXO-20U60100 | Front, side, rear, top, bottom and detail views. Dimensions in mm.

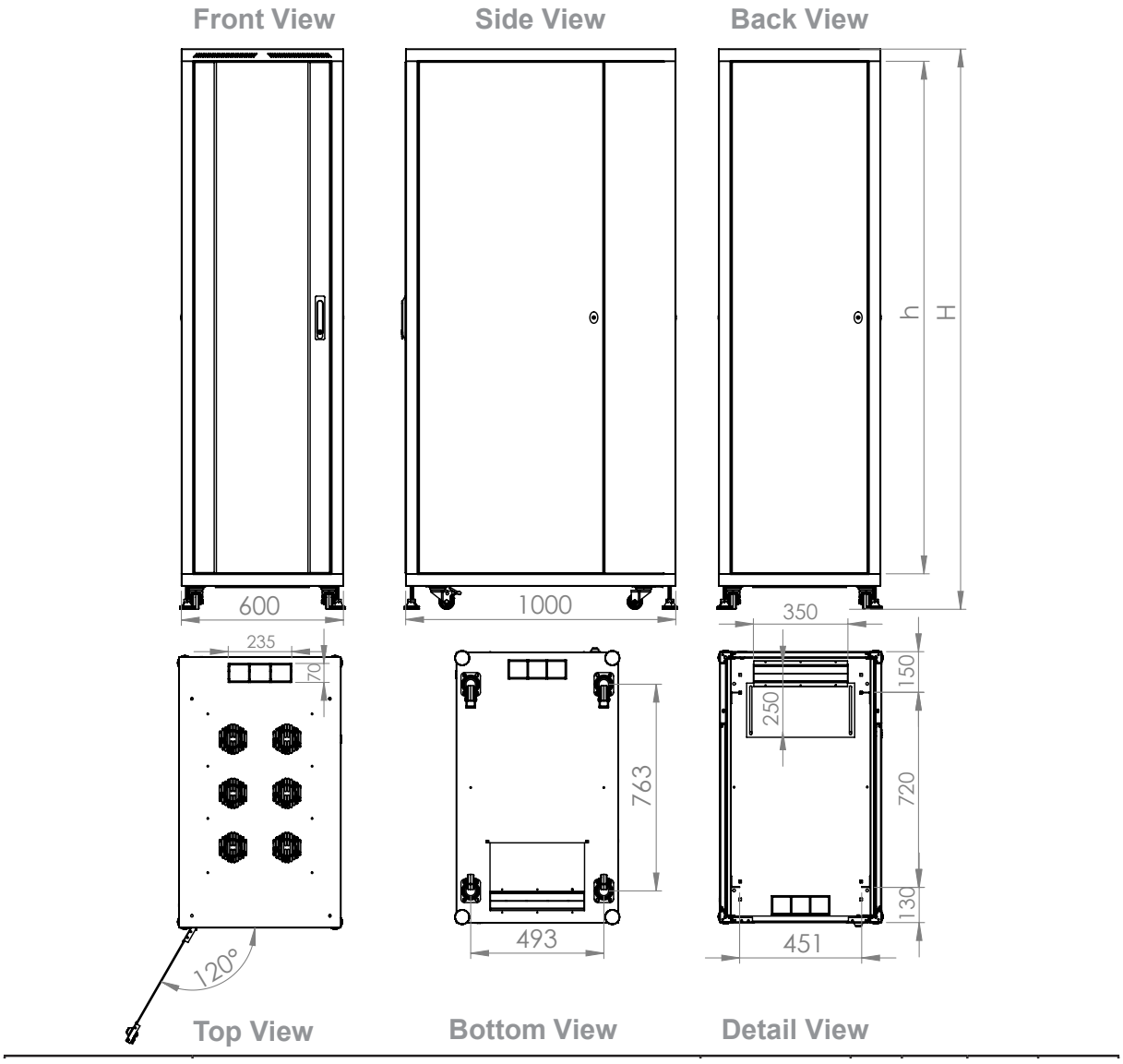

EXTERNAL W × D	INTERNAL HEIGHT	CABINET WEIGHT
600 × 1000 mm	892 mm	56 kg

Overall cabinet height (H) **1120 mm**

Use the stated dimensions for installation planning. The views are schematic. Cabinet weight excludes installed IT equipment.

OXOLINE / DOOR AND FINISH OPTIONS

Doors, panels and finishes

UPC-OXO-20U60100 | Front and rear door options for the 600 × 1000 mm cabinet.



RAL 9005 | Black



RAL 7035 | Light grey



Steel frame

Front doors



Single glass



Single perforated



Double perforated

Rear doors



Single solid steel



Double solid steel



Single perforated



Double perforated

OXOLINE / CONSTRUCTION

Exploded cabinet assembly

UPC-OXO-20U60100 | Cabinet frame, doors, cable access and optional accessories.

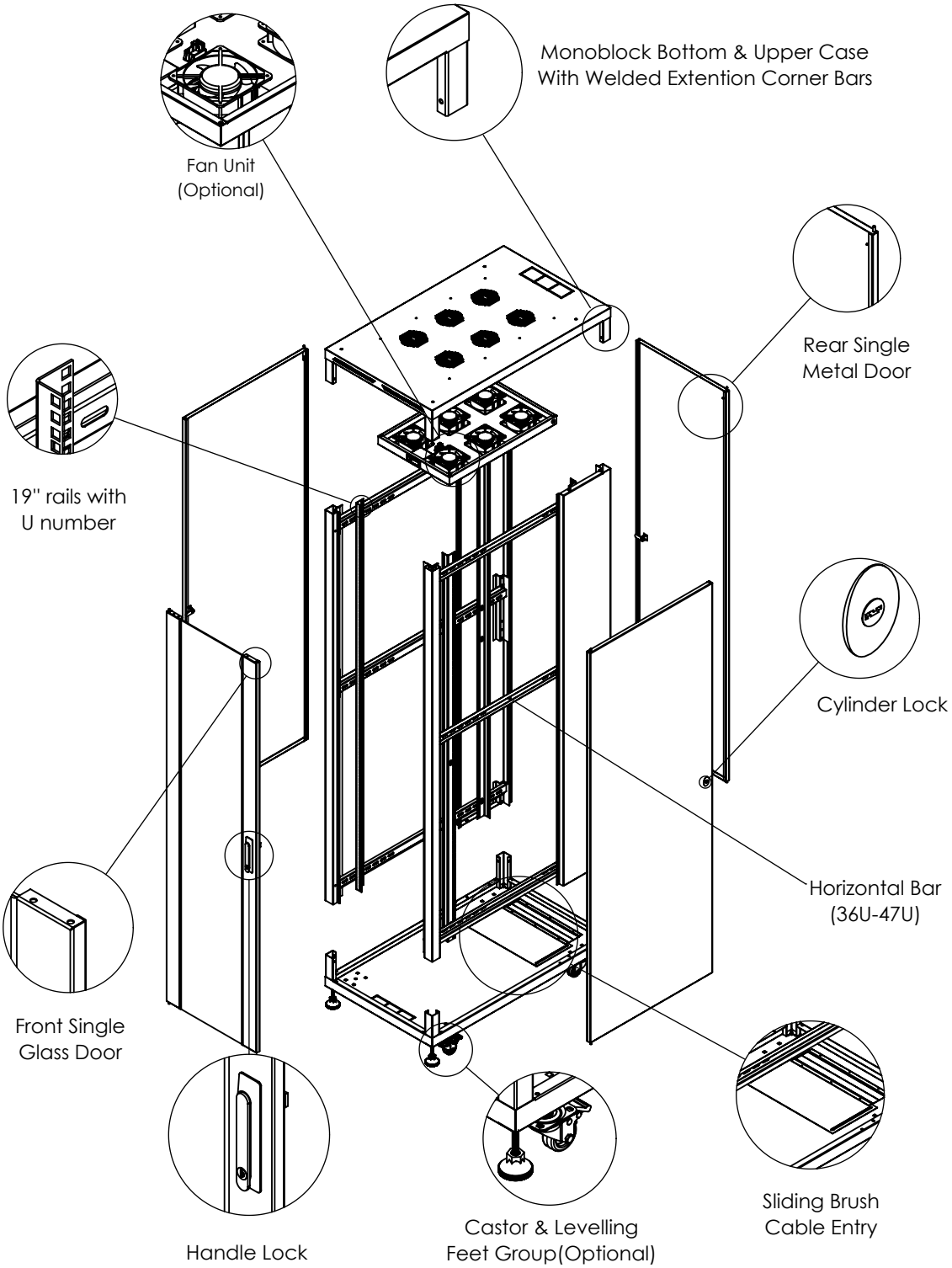

OXOLINE / TECHNICAL REFERENCES

Materials and test references

UPC-OXO-20U60100 | Enclosure tests and component specifications.

ENCLOSURE TESTS

Ingress protection

IP20 under EN 60529. The test uses a 12 mm diameter rigid probe, 80 mm long, applied at 10 N.

Mechanical performance

EN 61587-1, clauses 5.2.1 and 5.2.3. Static load performance level SL06 and rolling tests. Resonance and vibration testing under IEC 60068-2-6, shock under IEC 60068-2-27.

Climatic tests

C2 test exposures include cold at -25 ±3 °C under IEC 60068-2-1, dry heat at +70 ±2 °C under IEC 60068-2-2 and cyclic damp heat under IEC 60068-2-30.

Industrial atmosphere

A2 exposure to sulphur dioxide and hydrogen sulphide under IEC 60068-2-42, -43 and -49.

Protective bonding

Protective circuit resistance measured below 0.1 ohm under EN 61587-1 and EN 61010-1.

MATERIALS AND COMPONENTS

Steel and coating

Cold-rolled sheet steel, EN 10130. Coating test references cover gloss (ASTM D523), impact (ASTM D2794) and thickness (ASTM D1186/D1400).

Tempered glass

Front glass is 4 mm thick. The glass specification cites EN 12150-2 and a minimum bending strength of 120 N/mm².

Fan units and fasteners

Fan safety reference EN 62368-1:2020, AC:2020 and A11:2020. Fastener references ISO 7045 and ISO 4032.

Locks and castors

Locking hardware uses glass-reinforced PA6 and a ZnAl4Cu1 alloy. Wheel-set references EN 12532 and EN 12533.

Rack specification

Series references include EN IEC 61587-1:2022, UL 2416 and RoHS. Materials screening references IEC 62321.