OXOLINE / ORDER REFERENCE

47U Oxoline rack cabinet

UPC-OXO-47U6060 | 19-inch floor-standing cabinet | 600 × 600 mm nominal footprint



Series photograph. Cabinet height varies by model.

UPCOM ORDER CODE

UPC-OXO-47U6060

Earlier cabinet configuration

Use this order code when requesting a replacement cabinet or matching an existing installation.

Availability and dimensions

Confirm supply, current options and installation dimensions with UPCOM before ordering.

RACK HEIGHT	EXTERNAL W × D	CABINET WEIGHT
47U	600 × 600 mm	83 kg

Overall height (H)	**2320 mm**
Internal height (h)	**2092 mm**
Finish options	**RAL 9005 black or RAL 7035 light grey**

OXOLINE / MECHANICAL DRAWING

47U cabinet dimensions

UPC-OXO-47U6060 | Footprint drawing and documented configuration dimensions.

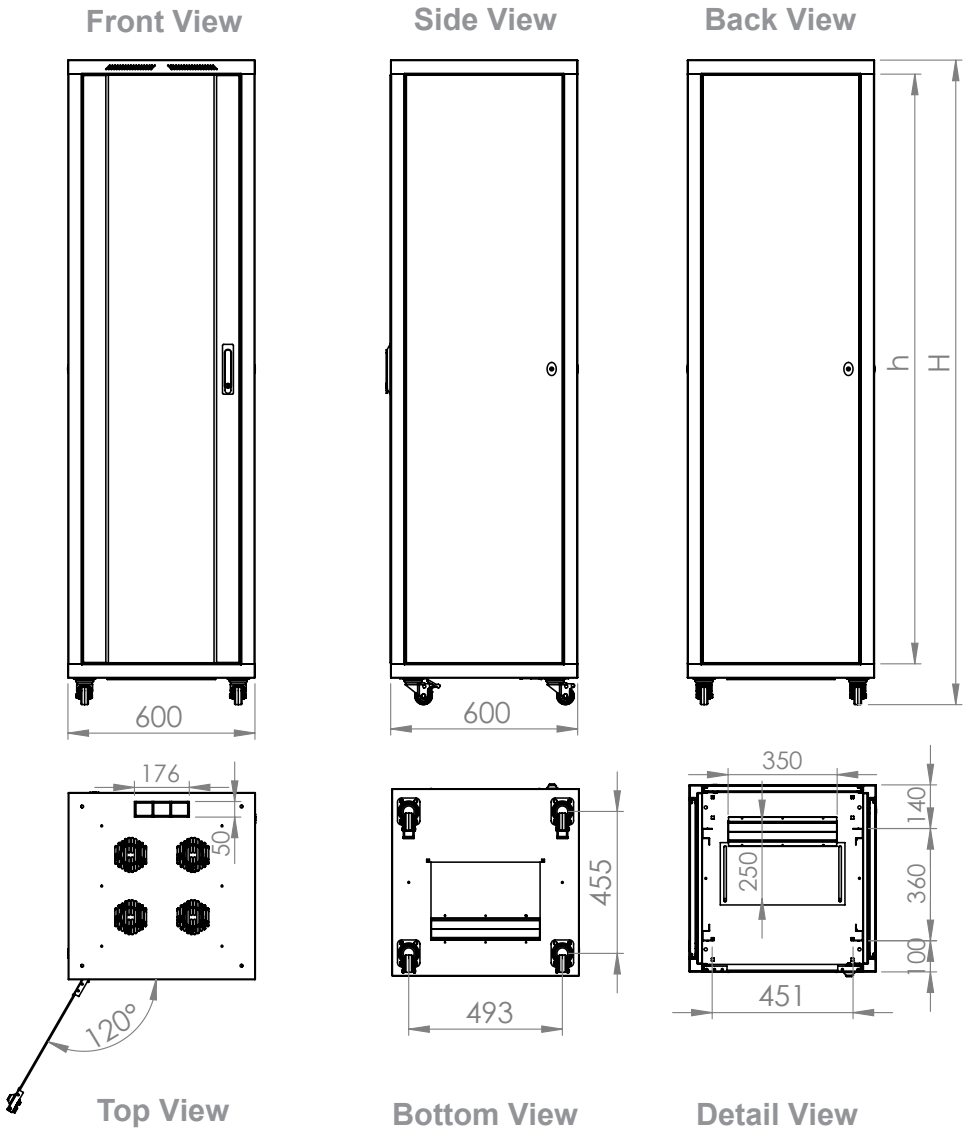

EXTERNAL W × D	INTERNAL HEIGHT	CABINET WEIGHT
600 × 600 mm	**2092 mm**	**83 kg**

Overall cabinet height (H) **2320 mm**

The views show the cabinet footprint. Confirm installation dimensions and options with UPCOM before ordering.

OXOLINE / DOOR AND FINISH OPTIONS

Doors, panels and finishes

UPC-OXO-47U6060 | Front and rear door options for the 600 × 600 mm cabinet.



RAL 9005 | Black



RAL 7035 | Light grey



Steel frame

Front doors



Single glass



Single perforated



Double perforated

Rear doors



Single solid steel



Double solid steel



Single perforated



Double perforated

OXOLINE / CONSTRUCTION

Exploded cabinet assembly

UPC-OXO-47U6060 | Cabinet frame, doors, cable access and optional accessories.

